PARTS LIST	
QTY	PART NUMBER
4	WALL - 8' STD
6	FL 8' - RED
2	FL 4' - RED
1	FL SB 18" - YELLOW
1	DUMP BOX - PCSL
10	TARGETS STAND W/ 5' STICKS
4	PCSL-P-HC REC A ZONE
3	PCSL-P-O
2	PCSL-NS
4	PCSL-R-HC REC A ZONE
3	PCSL-R-O

PCSL

PRACTICAL COMPETITION SHOOTING LEAGUE
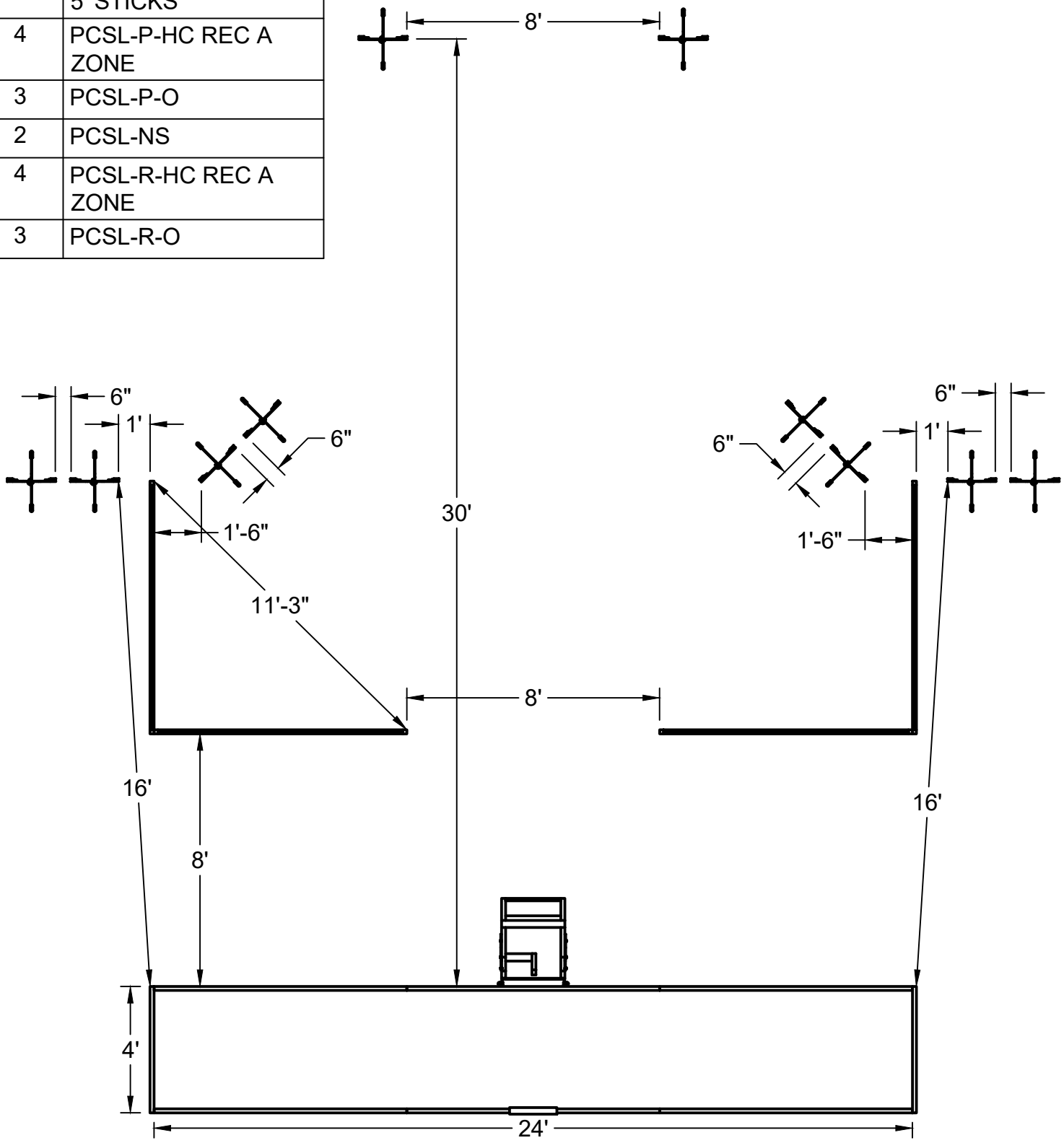
D24-1 Momentum